Published: 11-May-2011

Exhaust System - TDV6 2.7L Diesel -

General Specifications

Item	Specification
Exhaust manifolds	Cast with cross over pipe from right to left hand manifold exiting into single turbocharger
Exhaust system	Single, stainless steel downpipe with twin stainless steel intermediate and tail pipes and stainless steel mufflers
Catalytic converter - type/location	Near coupled cascade - located in the down pipe

Torque Specifications

Description	Nm	lb-ft
Catalytic converter clamp without diesel particulate filter (DPF)	55	40
Catalytic converter clamp with DPF	48	35
Catalytic converter to muffler nuts	48	35
DPF to muffler nuts	48	35
* Catalytic converter to exhaust manifold nuts	48	35
Service clamp	48	35
Differential pressure sensor pipe unions	35	26
** Exhaust gas temperature sensors	35	26
DPF heat shield bolts	10	7

*** New nuts must be installed**

*** Apply suitable high temperature resistant anti-seize compound**

mcx30.com

Published: 11-May-2011

Exhaust System - TDV6 2.7L Diesel - Exhaust System

Description and Operation

TdV6 EXHAUST SYSTEM COMPONENT LOCATION - WITHOUT DIESEL PARTICULATE FILTER

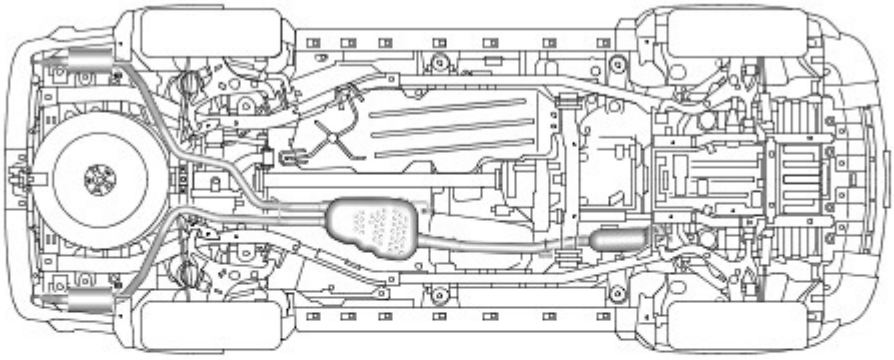

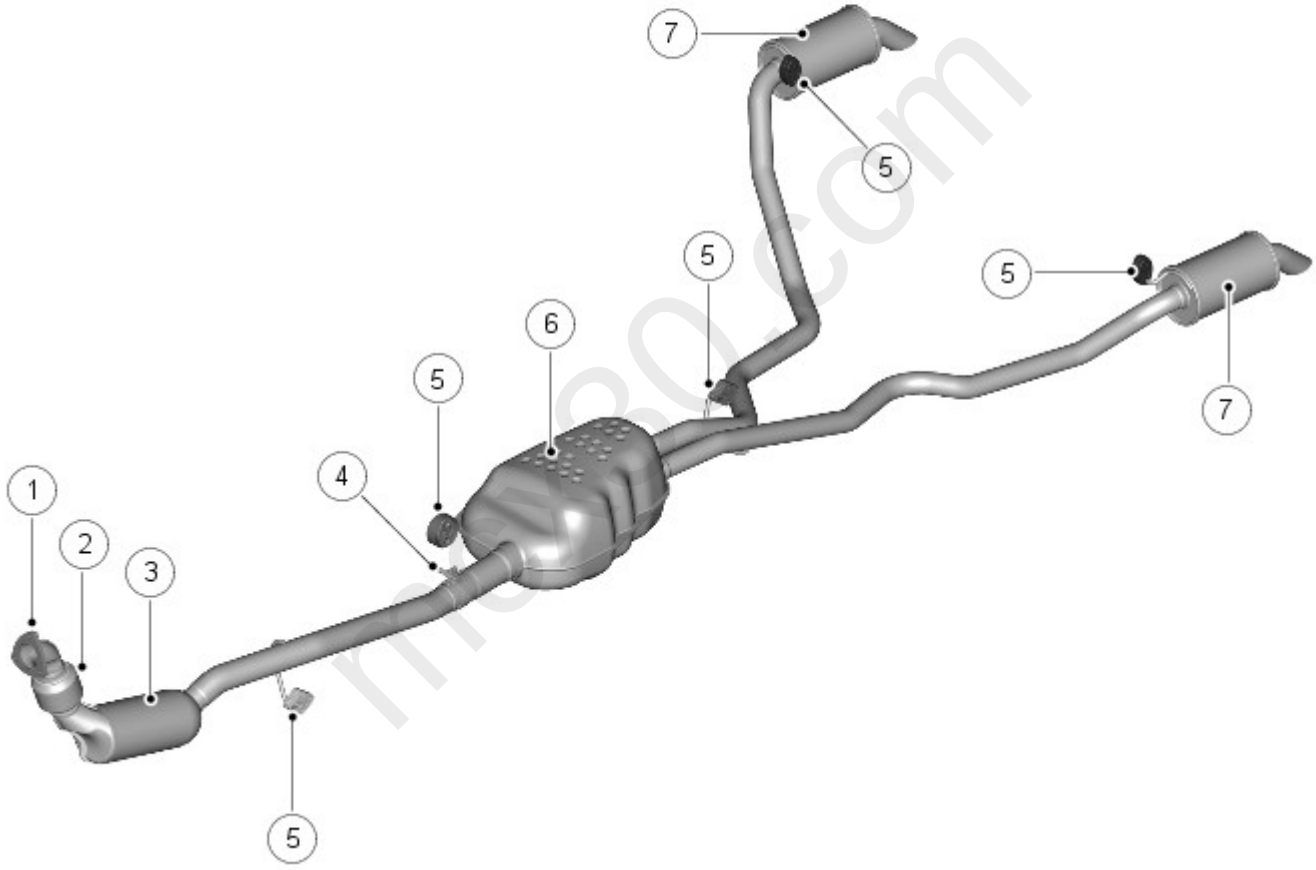

Item	Part Number	Description
1	-	Inlet flange
2	-	Flexible de-coupler
3	-	Catalytic converter
4	-	Clamp
5	-	Mounting rubber (5 off)
6	-	Silencer - Centre
7	-	Silencer - Rear

TdV6 EXHAUST SYSTEM COMPONENT LOCATION - WITH OPTIONAL DIESEL PARTICULATE FILTER - FROM 2008 MY (WHERE FITTED)

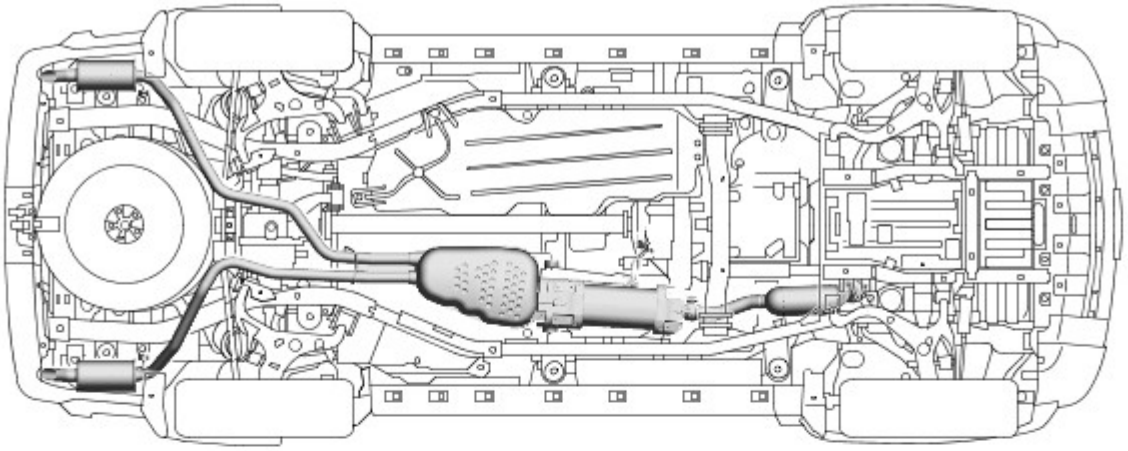

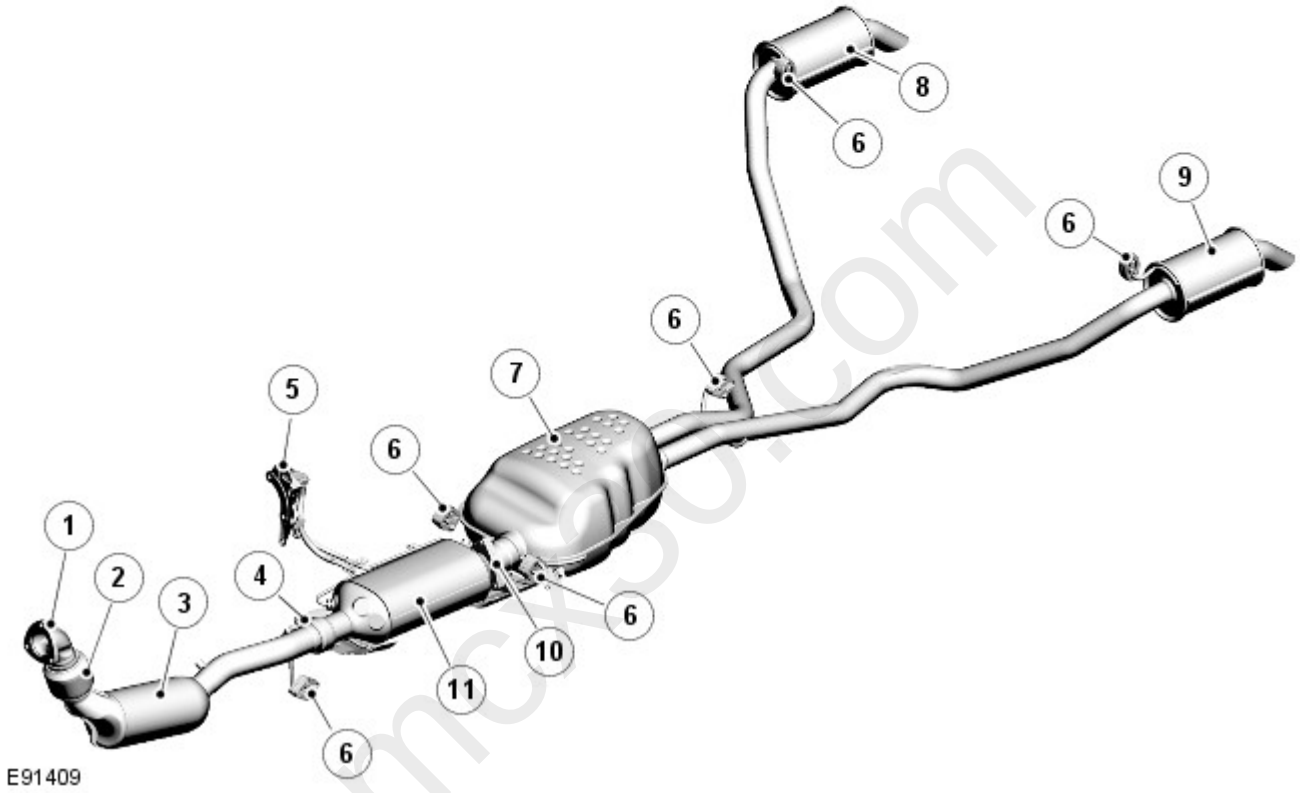

Item	Part Number	Description
1	-	Inlet flange
2	-	Flexible de-coupler
3	-	Catalytic converter
4	-	Clamp
5	-	Differential pressure sensor
6	-	Mounting rubber (6 off)
7	-	Silencer - Centre
8	-	Silencer - Rear Left Hand (LH)
9	-	Silencer - Rear Right Hand (RH)
10	-	Flange joint and gasket
11	-	DPF

OVERVIEW

The TdV6 exhaust system is fabricated from stainless steel and is supplied as two separate assemblies; a front section incorporating a catalytic converter and a rear section incorporating a centre silencer and two rear silencers.

The system is attached to the underside of the body with five mounting rubbers which are located on mild steel hanger bars that are welded to the system. The mounting rubbers locate on corresponding hangers which are welded to the underside of the vehicle body.

The system has service repair items available. Indentations in the rear section between the center and the rear silencers show the cut points for the service replacement rear silencers or front section. When a service repair section is used, the joint is connected using a sleeve and two clamps to connect the pipes at the cut points.

On vehicles from 2008MY, an optional Diesel Particulate Filter (DPF) is available. The non-DPF exhaust system is also

available on vehicles from 2008MY as the DPF is not required to comply with EU4 emission regulations.

• CAUTIONS:

⚠ The use of bio-fuels can seriously contaminate and destroy the coatings used on the catalytic converter. The DPF and the catalytic converter can become irreversibly contaminated if non-specified oils or fuels are used. This will result in the vehicle being unable to regenerate the DPF, becoming non-compliant with tailpipe emission regulations and replacement of the catalytic converter and DPF will be required.

⚠ If the vehicle is waded in deep water and the engine is stopped with the tailpipes submerged, the water, which can enter the system, can also contaminate both the DPF and the catalytic converter. This again can result in catalytic converter damage and damaging the ability for the DPF to regenerate therefore requiring both components to be replaced.

FRONT SECTION

The front section has a welded flange with three holes which provide for the attachment to three studs on the turbocharger. The flange is sealed with a metal gasket. This is secured to the turbocharger studs with three nuts.

The flange is welded to a fabricated elbow which in turn is welded to the de-coupler. Fabricated pressings are welded between the de-coupler and the body of the catalytic converter. The converter outlet pipe is a 60 mm (2.2 in) diameter tube, with a 2.0 mm (0.079 in) wall thickness, which is welded to the converter body. The outlet pipe has hanger bar which provides for the location of a mounting rubber.

Vehicles without DPF

The rear of the outlet pipe from the catalytic converter locates into the rear section. When the front section is inserted into the flared end, a clamp is used to compress and secure the joint.

Vehicles with Optional DPF - From 2008MY

The rear outlet pipe from the catalytic converter has a flared end which slides onto the DPF inlet pipe and is secured with a clamp. The outlet pipe of the DPF has a triangular shaped flange which mates with a similar flange on the rear section of the exhaust. The 2 flanges are sealed with a metal gasket and are secured using 3 locknuts screwed onto captive studs located in the DPF flange.

REAR SECTION

Vehicles without DPF

On vehicles without DPF, the rear section has a short 70 mm (2.75 in) diameter tube, with a 1.5 mm (0.06 in) wall thickness, which provides location for the front section as previously mentioned. The tube is welded to the centre silencer assembly.

Vehicles with Optional DPF - From 2008MY

On vehicles from 2008MY fitted with the optional DPF, the rear section has a short 70 mm (2.75 in) with a triangular flange which mates with a similar flange on the front section as previously mentioned.

All Vehicles

The centre silencer comprises two pressed stainless steel shells which are welded together to give a capacity of 25.2 liters (1537 in^3). The silencer contains baffles and perforated tubes which reduce noise as the exhaust gases pass through the silencer. Hanger bars are welded to the front right hand side and left hand side of the silencer and provide for the location of mounting rubbers.

The silencer has two 50 mm (2.0 in) diameter outlet pipes, with a 1.5 mm (0.06 in) wall thickness, which are curved to pass around the rear suspension components.

Each outlet pipe terminates in a welded joint with the rear silencers. The outlet pipes have a hanger bar which provides for the location of a mounting rubber.

A hanger bar is welded to the front face of each rear silencer and provides for the location of a mounting rubber. The silencer is a circular fabrication with a baffle tube which is surrounded with glass fiber to provide further noise suppression. Each silencer has a capacity of 2.7 liters (165 in^3).

The silencers each have an outlet pipe which is 55 mm (2.16 in) diameter, with a wall thickness of 1.2 mm (0.05 in). Each outlet pipe is curved downwards to direct exhaust gasses away from the rear of the vehicle.

CATALYTIC CONVERTER

The engine management system provides accurately metered quantities of fuel to the combustion chambers to ensure the most efficient use of fuel and to minimise the exhaust emissions.

To further reduce the carbon monoxide and hydrocarbons content of the exhaust gases, a catalytic converter (Diesel Oxidation Catalyst) is integrated into the front pipe of the exhaust system. In the catalytic converter the exhaust gases are passed through honeycombed ceramic elements coated with a special surface treatment called 'washcoat'. The washcoat increases the surface area of the ceramic elements by a factor of approximately 7000. On top of the washcoat is a coating containing platinum on vehicles without a DPF or platinum and palladium on vehicles with a DPF, which are the active constituents for converting harmful emissions into inert by-products. The platinum and palladium adds oxygen to the carbon monoxide and the hydrocarbons in the exhaust gases, to convert them into carbon dioxide and water.

mcx30.com

DIESEL PARTICULATE FILTER (DPF) - VEHICLES FROM 2008MY (WHERE FITTED)

On vehicles from 2008MY, an optional Diesel Particulate Filter (DPF) is available.

• NOTE: The non-DPF exhaust system is also available on vehicles from 2008MY.

The DPF system reduces diesel particulate emissions to negligible levels.

DPF System Components

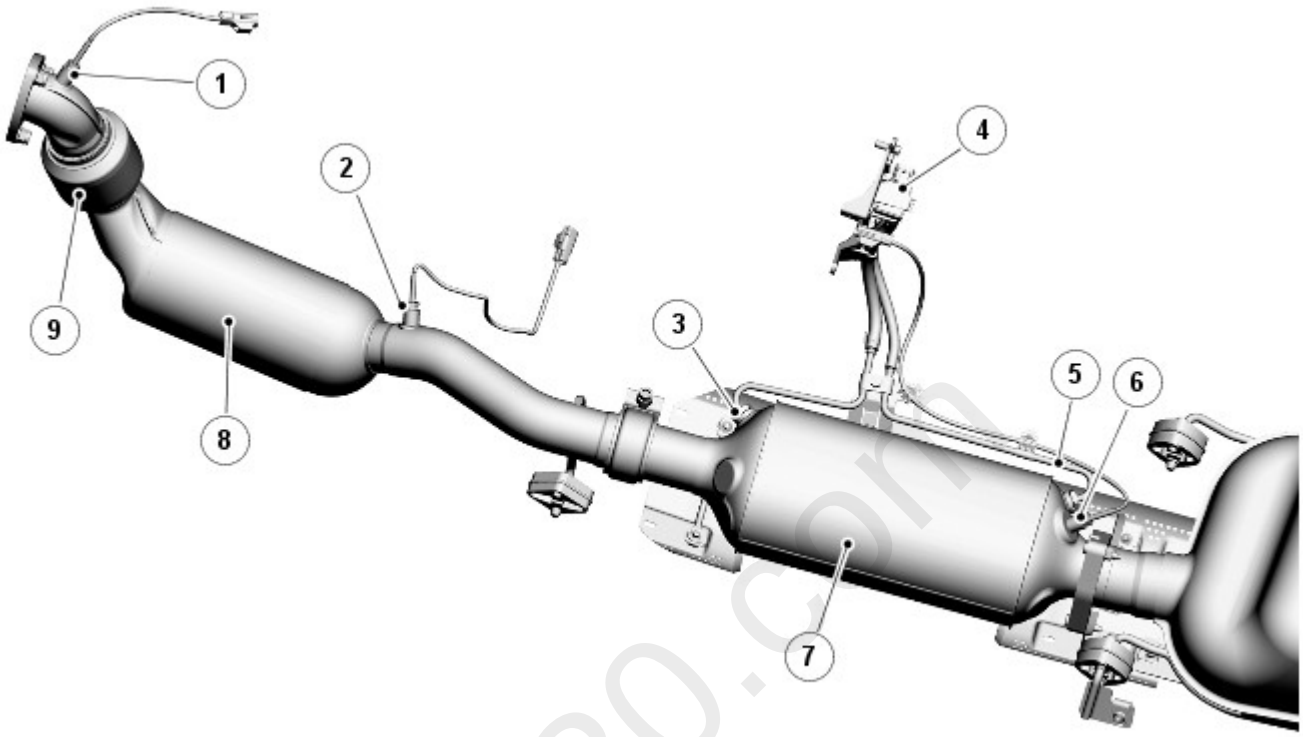

E91610

Item	Part Number	Description
1	-	Exhaust gas temperature sensor (pre catalyst)
2	-	Exhaust gas temperature sensor (post catalyst)
3	-	High pressure sensor pipe
4	-	Differential pressure sensor
5	-	Low pressure sensor pipe
6	-	Exhaust gas temperature sensor (Post DPF)
7	-	Diesel particulate filter
8	-	Catalytic converter

The particulate emissions are the black fumes emitted from the diesel engine under certain load conditions. The emissions are a complex mixture of solid and liquid components with the majority of the particulates being carbon microspheres on which hydrocarbons from the engine's fuel and lubricant condense.

The DPF system comprises the following components:

- Diesel particulate filter
- DPF control software incorporated into the Engine Control Module (ECM)
- Differential pressure sensor.

Diesel Particulate Filter

The DPF is located in the exhaust system, downstream of the catalytic converter. A major feature of the DPF is its ability for regeneration. Regeneration is the burning of particulates trapped by the filter to prevent obstruction to the free flow of exhaust gasses. The regeneration process takes place at calculated intervals and is not noticeable by the driver of the vehicle.

Regeneration is most important, since an overfilled filter can damage the engine through excessive exhaust back pressure and can itself be damaged or destroyed. The material trapped in the filter is in the most part carbon particles with some absorbed hydrocarbons.

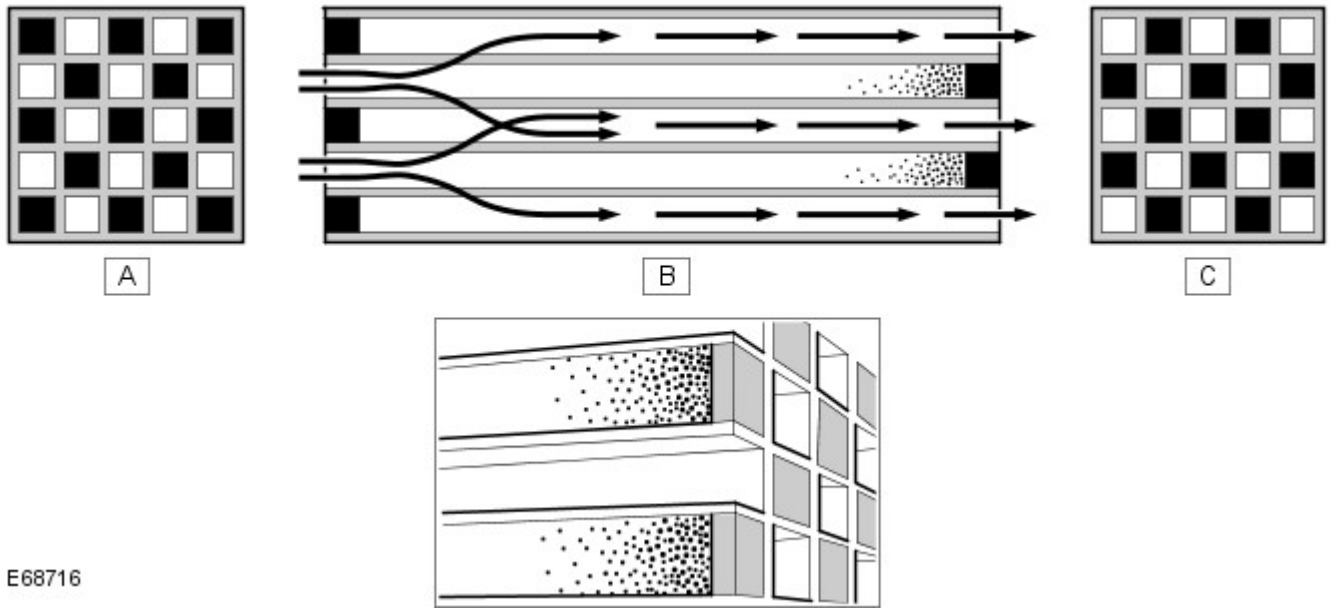

Item	Part Number	Description
A	-	Front face showing alternate closed cells
B	-	Side view showing exhaust gas flow through the filter and particulate build up
C	-	Rear face showing alternate closed cells

The DPF uses a filter technology based on a filter with a catalytic coating. The DPF is made from silicon carbide housed in a steel container and has excellent thermal shock resistance and thermal conductivity properties. The DPF is designed for the engine's operating requirements to maintain the optimum back pressure requirements.

The porous surface of the filter consists of a number of small parallel channels positioned in the longitudinal direction of the exhaust system. Adjacent channels in the filter are alternately plugged at the end. This design forces the exhaust gasses to flow through the porous filter walls, which act as the filter medium. Particulate matter which are too big to pass through the porous surface are collected and stored in the channels.

The collected particulate matter, if not removed, can create an obstruction to exhaust gas flow. The particles are removed by a regeneration process which oxidizes the particles.

DPF regeneration is controlled by the temperature of the exhaust gasses and the DPF. The DPF includes a wash coat to the filter surface which comprises platinum and other active components and is similar to the catalytic converter. At certain exhaust gas and DPF temperatures the wash coat promotes combustion of the particles in addition to oxidizing carbon monoxide and hydrocarbon emissions.

The exhaust gas and DPF temperatures are controlled by the DPF software located in the ECM. The DPF software monitors the load status of the DPF based on driving style, distance travelled and signals from the differential pressure sensor and temperature sensors. When the particulate loading of the DPF reaches predetermined levels, the DPF is actively regenerated by adjusting, in conjunction with the ECM, various engine control functions such as:

- fuel injection
- intake air throttle
- exhaust gas recirculation
- turbocharger boost pressure control.

The regeneration process is possible because of the flexibility of the common-rail fuel injection engine which provides precise control of fuel flow, fuel pressure and injection timing which are essential requirements to promote the efficient regeneration process.

Two processes are used to regenerate the DPF; passive and active.

Passive Regeneration

Passive regeneration requires no special engine management intervention and occurs during normal engine operation. The passive regeneration involves a slow conversion of the particulate matter deposited in the DPF into carbon dioxide. This process is active when the DPF temperature reaches 250°C (482°F) and is a continuous process when the vehicle is being driven at higher engine loads and speeds.

During passive regeneration, only a portion of the particulate matter is converted into carbon dioxide. This is due to the chemical reaction process which is only effective within the normal operating temperature range of 250°C to 500°C (482°F to 932°F).

Above this temperature range the conversion efficiency of the particulates into carbon dioxide increases as the DPF temperature is raised. These temperatures can only be achieved using the active regeneration process.

Active Regeneration

Active regeneration starts when the particulate loading of the DPF reaches a threshold as monitored or determined by the DPF control software. The threshold calculation is based on driving style, distance travelled and back pressure signals from the differential pressure sensor.

Active regeneration generally occurs every 450 miles (725 km) although this is highly dependant on how the vehicle is driven. For example, if the vehicle is driven at low loads in urban traffic regularly, active regeneration will occur more

often. This is due to the rapid build-up of particulates in the DPF than if the vehicle is driven at high speeds when passive regeneration will have occurred.

The DPF software incorporates a mileage trigger which is used as back-up for active regeneration. If active regeneration has not been initiated by a back pressure signal from the differential pressure sensor, regeneration is requested based on distance travelled.

Active regeneration of the DPF is commenced when the temperature of the DPF is increased to the combustion temperature of the particles. The DPF temperature is raised by increasing the exhaust gas temperature. This is achieved by introducing post-injection of fuel after the pilot and main fuel injections have occurred.

This is determined by the DPF software monitoring the signals from the two DPF temperature sensors to establish the temperature of the DPF. Depending on the DPF temperature, the DPF software requests the ECM to perform either one or two post-injections of fuel:

- The first post-injection of fuel retards combustion inside the cylinder which increases the temperature of the exhaust gas.
- The second post-injection of fuel is injected late in the power stroke cycle. The fuel partly combusts in the cylinder, but some unburnt fuel also passes into the exhaust where it creates an exothermic event within the catalytic converter, further increasing the temperature of the DPF.

The active regeneration process takes approximately 20 minutes to complete. The first phase increases the DPF temperature to 500°C (932°F). The second phase further increases the DPF temperature to 600°C (1112°F) which is the optimum temperature for particle combustion. This temperature is then maintained for 15-20 minutes to ensure complete incineration of the particles within the DPF. The incineration process converts the carbon particles to carbon dioxide and water.

The active regeneration temperature of the DPF is closely monitored by the DPF software to maintain a target temperature of 600°C (1112°F) at the DPF inlet. The temperature control ensures that the temperatures do not exceed the operational limits of the turbocharger and the catalytic converter. The turbocharger inlet temperature must not exceed 830°C (1526°F) and the catalytic converter brick temperature must not exceed 800°C (1472°F) and the exit temperature must remain below 750°C (1382°F).

During the active regeneration process the following ECM controlled events occur:

- The turbocharger is maintained in the fully open position. This minimizes heat transmission from the exhaust gas to the turbocharger and reduces the rate of exhaust gas flow allowing optimum heating of the DPF. If the driver demands an increase in engine torque, the turbocharger will respond by closing the vanes as necessary.
- The throttle is closed as this assists in increasing the exhaust gas temperature and reduces the rate of exhaust gas flow which has the effect of reducing the time for the DPF to reach the optimum temperature.
- The Exhaust Gas Recirculation (EGR) valve is closed. The use of EGR decreases the exhaust gas temperature and therefore prevents the optimum DPF temperature being achieved.

If, due to vehicle usage and/or driving style, the active regeneration process cannot take place or is unable to regenerate the DPF, the dealer can force regenerate the DPF. This is achieved by either driving the vehicle until the engine is at its normal operating temperature and then driving for a further 20 minutes at speeds of not less than 30 mph (48 km/h) or by connecting a Land Rover approved diagnostic system to the vehicle which will guide the technician through an automated regeneration procedure to clean the DPF.

Diesel Particulate Filter Control

The DPF requires constant monitoring to ensure that it is operating at its optimum efficiency and does not become blocked. The ECM contains DPF software which controls the monitoring and operation of the DPF system and also monitors other vehicle data to determine regeneration periods and service intervals.

The DPF software can be divided into three separate control software modules; a DPF supervisor module, a DPF fuel management module and a DPF air management module.

These three modules are controlled by a fourth software module known as the DPF co-ordinator module. The co-ordinator module manages the operation of the other modules when an active regeneration is requested. The DPF supervisor module is a sub-system of the DPF co-ordinator module.

DPF Fuel Management Module

The DPF fuel management module controls the following functions:

- Timing and quantity of the four split injections per stroke (pilot, main and two post injections).
- Injection pressure and the transition between the three different calibration levels of injection.

The above functions are dependant on the condition of the catalytic converter and the DPF.

The controlled injection determines the required injection level in addition to measuring the activity of the catalytic converter and the DPF. The fuel management calculates the quantity and timing for the four split injections, for each of the three calibration levels for injection pressure, and also manages the transition between the levels.

The two post injections are required to separate the functionality of increasing in-cylinder gas temperatures and the production of hydrocarbons. The first post injection is used to generate the higher in-cylinder gas temperature while simultaneously retaining the same engine torque output produced during normal (non-regeneration) engine operation. The second post injection is used to generate hydrocarbons by allowing unburnt fuel into the catalytic converter without producing increased engine torque.

DPF Air Management Module

The DPF air management module controls the following functions:

- EGR control

- Turbocharger boost pressure control
- Intake air temperature and pressure control.

During active regeneration, the EGR operation is disabled and the closed-loop activation of the turbocharger boost controller is calculated. The air management module controls the air in the intake manifold to a predetermined level of pressure and temperature. This control is required to achieve the correct in-cylinder conditions for stable and robust combustion of the post injected fuel.

The module controls the intake air temperature by actuating the EGR throttle and by adjustment of the turbocharger boost pressure control.

DPF Co-ordinator Module

The DPF co-ordinator module reacts to a regeneration request from the supervisor module by initiating and co-ordinating the following DPF regeneration requests:

- EGR cut-off
- Turbocharger boost pressure control
- Engine load increase
- Control of air pressure and temperature in the intake manifold
- Fuel injection control.

When the supervisor module issues a regeneration request, the co-ordinator module requests EGR cut-off and a regeneration specific turbocharger boost pressure control. It then waits for a feedback signal from the EGR system confirming that the EGR valve is closed.

When the EGR valve is closed, the co-ordinator module initiates requests to increase engine load by controlling the intake air temperature and pressure.

Once confirmation is received that intake conditions are controlled or a calibration time has expired, the co-ordinator module then changes to a state awaiting an accelerator pedal release manoeuvre from the driver. If this occurs or a calibration time has expired, the co-ordinator module generates a request to control fuel injections to increase exhaust gas temperature.

Differential Pressure Sensor

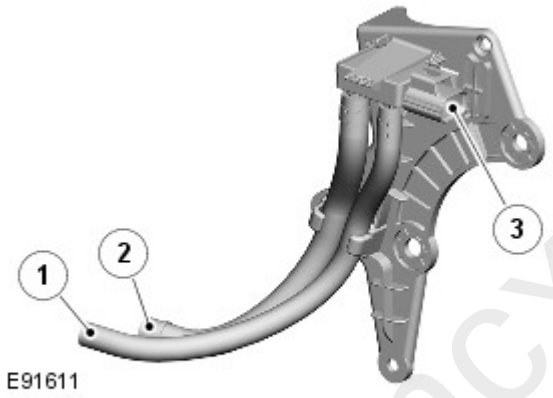

Item	Part Number	Description
1	-	Low pressure connection
2	-	High pressure connection
3	-	Electrical connector

The differential pressure sensor is located on a bracket which is attached to the transfer case.

The differential pressure sensor is used by the DPF software to monitor the condition of the DPF. Two pipe connections on the sensor are connected by pipes to the inlet and outlet ends of the DPF. The pipes allow the sensor to measure the inlet and outlet pressures of the DPF

As the amount of particulates trapped by the DPF increases, the pressure at the inlet side of the DPF increases in comparison to the DPF outlet. The DPF software uses this comparison, in conjunction with other data, to calculate the accumulated amount of trapped particulates.

By measuring the pressure difference between the DPF inlet and outlet and the DPF temperature, the DPF software can determine if the DPF is becoming blocked and requires regeneration.

Differential Particulate Filter Temperature Sensors

Three temperature sensors are used in the DPF system. The first is located just after the turbocharger in the catalytic converter inlet pipe, the second located in the catalytic converter outlet pipe and the third in the DPF outlet cone pipe work.

The sensors measure the temperature of exhaust gas exiting the turbocharger, after the catalyst and after it passes through the DPF to provide the information needed to calculate the DPF temperature.

The information is used, in conjunction with other data, to estimate the amount of accumulated particulates and to control

mcx30.com

the DPF temperature.

Instrument Cluster Indications

For drivers who make regular short journeys at low speeds, it may not be possible to efficiently regenerate the DPF. In this case, the DPF software will detect a blockage of the DPF from signals from the differential pressure sensor and will alert the driver as follows.

Item	Part Number	Description
1	-	'DPF FULL VISIT DEALER' message
2	-	'DPF FULL' message

Vehicles with DPF use a high-line instrument cluster to alert the driver to the condition of the DPF via messages in the message centre.

When the DPF becomes full the driver will be alerted to this condition by a message 'DPF FULL' accompanied by a handbook symbol. As detailed in the Owners Handbook, the driver should drive the vehicle until the engine is at its normal operating temperature and then drive for a further 20 minutes at speeds of not less than 30 mph (48 km/h). Successful regeneration of the DPF is indicated to the driver by the 'DPF FULL' message no longer being displayed.

If the DPF software detects that the DPF is still blocked, the message will change to 'DPF FULL VISIT DEALER', the driver should take the vehicle to an authorized dealer to have the DPF force regenerated.

Diesel Particulate Filter Side Effects

The following section details some side effects caused by the active regeneration process.

Engine Oil Dilution

Engine oil dilution can occur due to small amounts of fuel entering the engine crankcase during the post-injection phases. This has made it necessary to introduce a calculation based on driving style to reduce oil service intervals if necessary. The driver is alerted to the oil service by a message in the instrument cluster.

The DPF software monitors the driving style, the frequency of the active regeneration and duration. Using this information a calculation can be made on the engine oil dilution. When the DPF software calculates the engine oil dilution has reached a predetermined threshold (fuel being 7% of engine oil volume) a service message is displayed in the instrument cluster.

Depending on driving style, some vehicles may require an oil service before the designated interval. If an service message is displayed, the vehicle will be required have a full service and the service interval counter will be reset.

Fuel Consumption

During the active regeneration process of the DPF, there will be an increase in fuel consumption. However, because active regeneration occurs infrequently and for limited periods of time, the overall effect on fuel consumption is approximately 2%. The additional fuel used during the active regeneration process is accounted for in the instantaneous and average fuel consumption displays in the instrument cluster.

mcx30.com

Published: 11-May-2011

Exhaust System - TDV6 2.7L Diesel - Exhaust System

Diagnosis and Testing

Principle of Operation

For a detailed description of the exhaust system, refer to the relevant Description and Operation section of the workshop manual. REFER to: Exhaust System (309-00A Exhaust System - TDV6 2.7L Diesel, Description and Operation).

Inspection and Verification

CAUTION: Diagnosis by substitution from a donor vehicle is **NOT** acceptable. Substitution of control modules does not guarantee confirmation of a fault and may also cause additional faults in the vehicle being checked and/or the donor vehicle.

- NOTE: Check and rectify basic faults before beginning diagnostic routines involving pinpoint tests.

1. **1.** Verify the customer concern.
2. **2.** Visually inspect for obvious signs of mechanical or electrical damage.

Visual Inspection

Mechanical	Electrical
• Leaks • Metal fatigue • Pipes • Catalytic converter • Muffler(s) • Joints • Mountings • Clearance around components	• Fuses • Wiring harness • Electrical connector(s) • Sensor(s) • Engine Control Module (ECM)

3. **3.** If an obvious cause for an observed or reported concern is found, correct the cause (if possible) before proceeding to the next step.
4. **4.** If the cause is not visually evident, verify the symptom and refer to the Symptom Chart, alternatively check for Diagnostic Trouble Codes (DTCs) and refer to the DTC Index.

Symptom Chart

Symptom	Possible Causes	Action
Noisy or leaking exhaust	• Exhaust system/components	Install new components as necessary. Refer to the relevant section of the workshop manual.
Lack of power	• Air intake system fault • Restricted exhaust system • Low fuel pressure • Exhaust Gas Recirculation (EGR) valve(s) fault • Turbocharger fault	Check the air intake system. Check for a blocked catalytic converter or muffler, install new components as necessary. Check the fuel pressure. For EGR and turbocharger tests, refer to the relevant section of the workshop manual.

DTC Index

For a list of Diagnostic Trouble Codes (DTCs) that could be logged on this vehicle, please refer to Section 100-00.

mex30.com

Published: 11-May-2011

Exhaust System - TDV6 2.7L Diesel - Catalytic ConverterVehicles Without: Diesel Particulate Filter (DPF)

Removal and Installation

Removal

1. Disconnect the battery ground cable.
   For additional information, refer to: Specifications (414-00 Battery and Charging System - General Information, Specifications).

2. WARNING: Do not work on or under a vehicle supported only by a jack. Always support the vehicle on safety stands.

   Raise and support the vehicle.

3. Remove the exhaust system.
   For additional information, refer to: Exhaust System - Vehicles Without: Diesel Particulate Filter (DPF) (309-00A Exhaust System - TDV6 2.7L Diesel, Removal and Installation).

4. Remove the catalytic converter.
   - Remove the nut and release the retaining clamp.

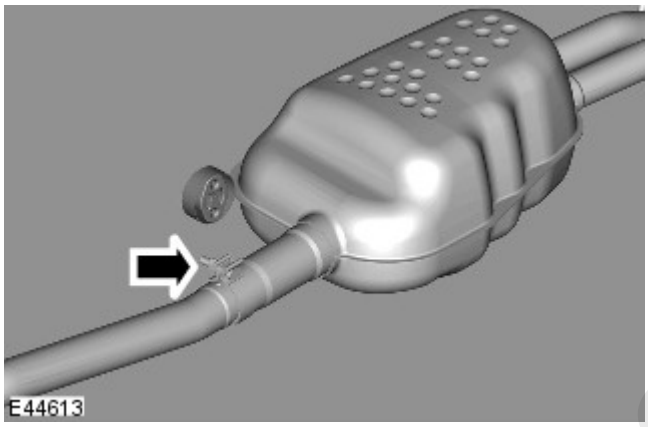

Installation

1. NOTE: Do not tighten the retaining clamp at this stage.

   Position the catalytic converter to the front muffler.
   - Clean the components.
   - Install the nut.

2. Install the exhaust system.
   For additional information, refer to: Exhaust System - Vehicles Without: Diesel Particulate Filter (DPF) (309-00A Exhaust System - TDV6 2.7L Diesel, Removal and Installation).

3. Tighten the catalytic converter retaining clamp to 55 Nm (40 lb.ft).

4. Connect the battery ground cable.
   For additional information, refer to: Specifications (414-00 Battery and Charging System - General Information, Specifications).

mcx30.com

Published: 11-May-2011

Exhaust System - TDV6 2.7L Diesel - Catalytic ConverterVehicles With: Diesel Particulate Filter (DPF)

Removal and Installation

Removal

WARNING: Observe due care when working near a hot exhaust system.

1. WARNING: Do not work on or under a vehicle supported only by a jack. Always support the vehicle on safety stands.

Raise and support the vehicle.

2. Remove the exhaust system.
For additional information, refer to: Exhaust System - Vehicles With: Diesel Particulate Filter (DPF) (309-00A Exhaust System - TDV6 2.7L Diesel, Removal and Installation).

3. Remove the diesel particulate filter (DPF) heat shield.

- Remove the 3 bolts.

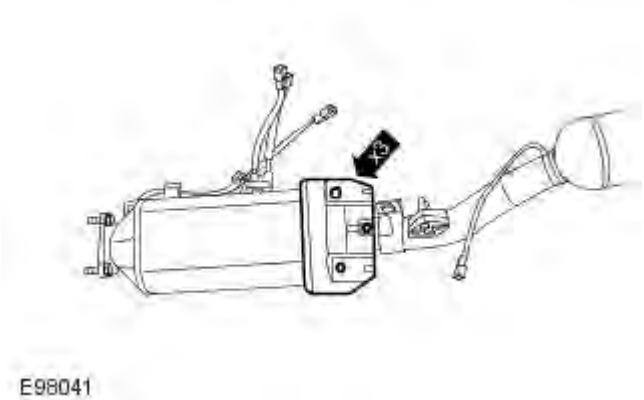

E98041

4. Remove the catalytic converter.

- Remove the nut.
- Remove and discard the clamp.

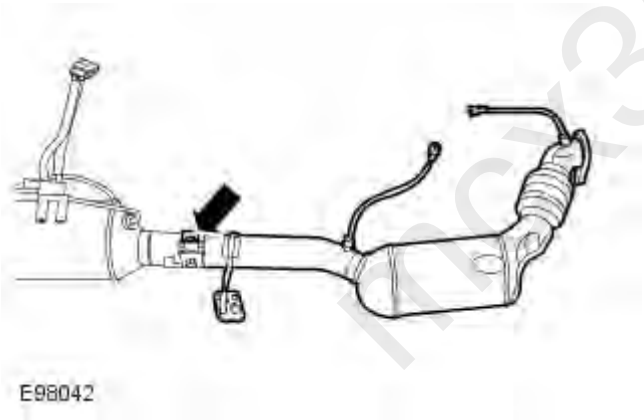

E98042

5. NOTE: Do not disassemble further if the component is removed for access only.

Remove the catalytic converter temperature sensors.

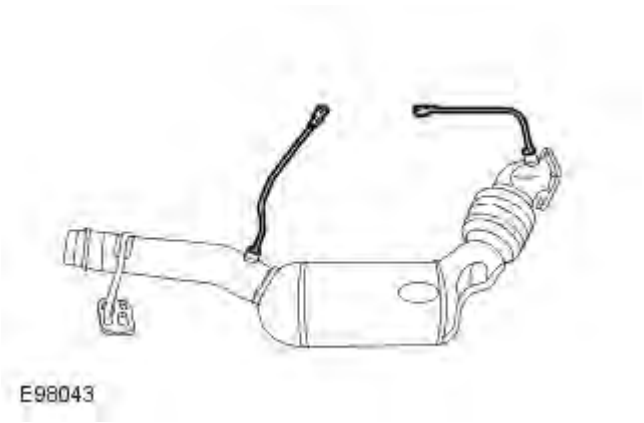

E98043

Installation

1. Install the catalytic converter temperature sensors.

- Tighten to 35 Nm (26 lb.ft).

2. CAUTION: Make sure that the mating faces are clean and free of foreign material.

• NOTE: Do not fully tighten the clamp at this stage.

Install the catalytic converter.

- Install a new clamp.

3. Install the exhaust system.
For additional information, refer to: Exhaust System - Vehicles With: Diesel Particulate Filter (DPF) (309-00A Exhaust System - TDV6 2.7L Diesel, Removal and Installation).

4. Install the DPF heat shield.

- Tighten the 2 bolts to 10 Nm (7 lb.ft).

mcx30.com

Published: 11-May-2011

Exhaust System - TDV6 2.7L Diesel - Diesel Particulate Filter (DPF)

Removal and Installation

Removal

WARNING: Observe due care when working near a hot exhaust system.

1. WARNING: Do not work on or under a vehicle supported only by a jack. Always support the vehicle on safety stands.

   Raise and support the vehicle.

2. Disconnect the diesel particulate filter (DPF), differential pressure sensor electrical connector.

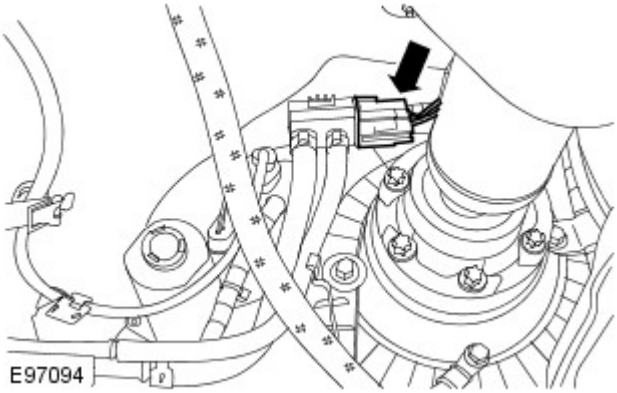

3. Release the DPF differential pressure sensor.
   - Release the clip.

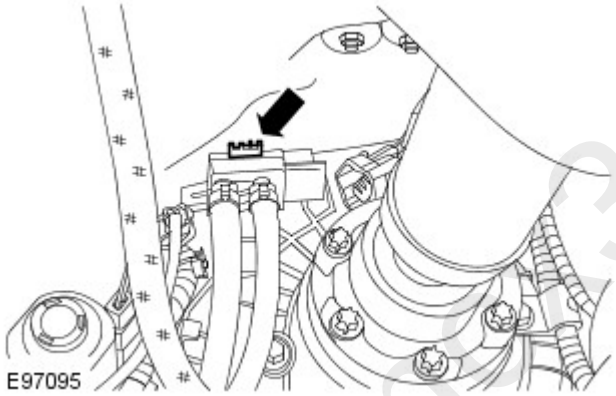

4. Disconnect the DPF exhaust gas temperature sensor electrical connector.

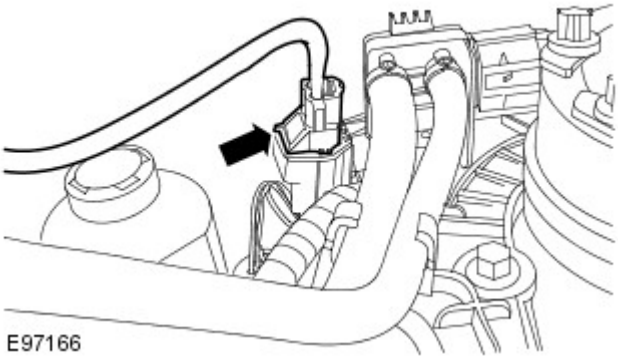

mx30.com

5. CAUTION: Make sure that the exhaust system is supported with a suitable stand.

Release the 6 exhaust hangers.

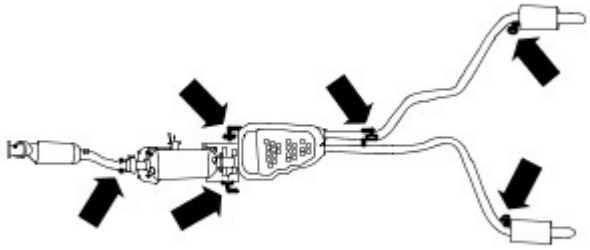

E98050

6. Remove the DPF rear heat shield.

- Remove the 4 bolts.

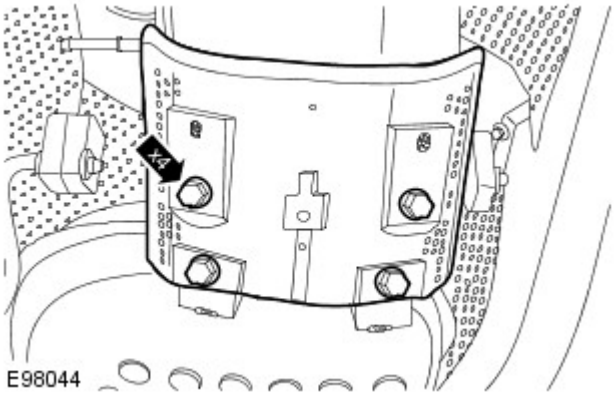

E98044

7. NOTE: Discard the gasket.

Reposition the muffler and tailpipe assembly.

- Remove the 3 nuts.
- Remove the bracket.

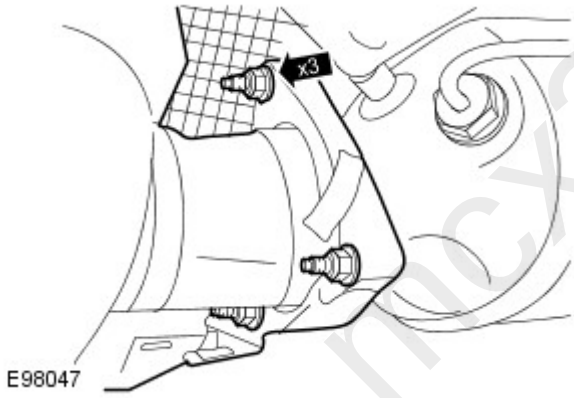

E98047

8. Remove the DPF front heat shield.

- Remove the 3 bolts.

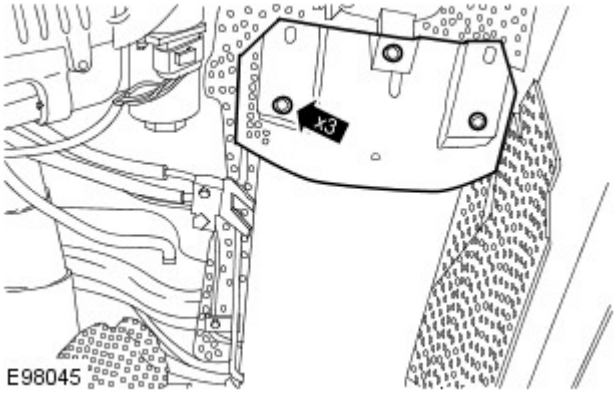

E98045

mcx30.com

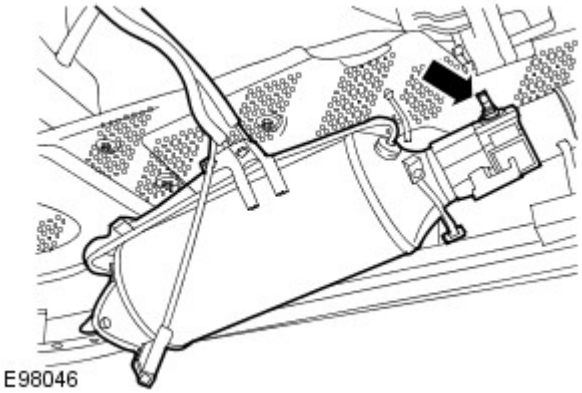

9. Remove the DPF.

- Remove the nut.

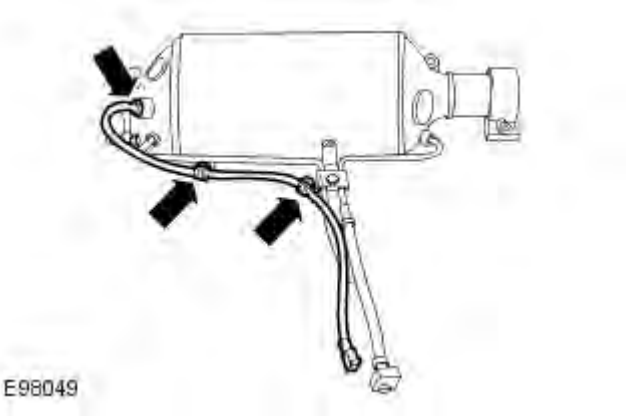

10. NOTE: Do not disassemble further if the component is removed for access only.

Remove the DPF exhaust gas temperature sensor.

- Release the wiring harness from the 2 clips.

Installation

1. Install the DPF exhaust gas temperature sensor.

- Tighten to 35 Nm (26 lb.ft).
- Secure the wiring harness in the clips.

2. NOTE: Do not fully tighten the clamp at this stage.

Install the DPF.

3. NOTE: Install a new gasket.

Secure the muffler and tailpipe assembly.

- Install the bracket.
- Tighten the nuts to 48 Nm (35 lb.ft).
- Secure the exhaust hangers.

4. Tighten the catalytic converter to DPF clamp.

- Tighten the nut to 48 Nm (35 lb.ft).

5. Install the DPF heat shields.

- Tighten the bolts to 10 Nm (7 lb.ft).

6. Secure the DPF differential pressure sensor.

7. Connect the DPF differential pressure sensor electrical connector.

8. Connect the DPF exhaust gas temperature sensor electrical connector.

mcx30.com

Published: 11-May-2011

Exhaust System - TDV6 2.7L Diesel - Diesel Particulate Filter (DPF) Differential Pressure Sensor

Removal and Installation

Removal

WARNING: Observe due care when working near a hot exhaust system.

1. WARNING: Do not work on or under a vehicle supported only by a jack. Always support the vehicle on safety stands.

Raise and support the vehicle.

2. Disconnect the diesel particulate filter (DPF), differential pressure sensor electrical connector.

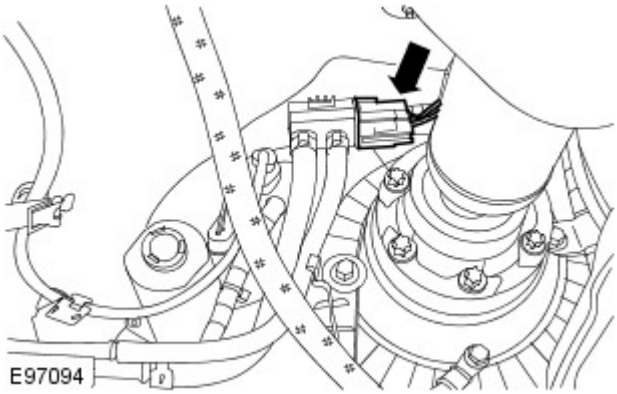

3. Release the DPF differential pressure sensor.

- Release the clip.

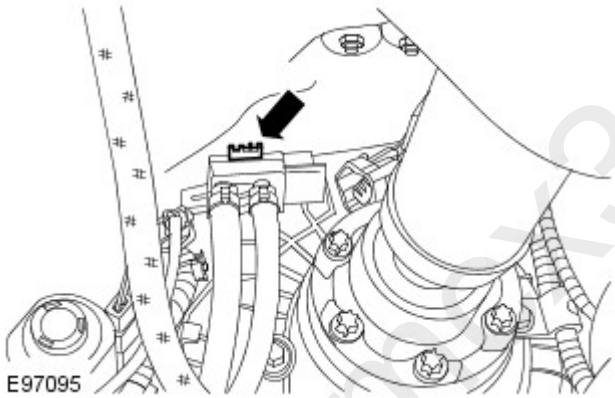

4. CAUTION: Make a note of the connection orientation of the high and low pressure hoses to the sensor ports. Make sure the hoses are located to the correct sensor port when installed. Failure to follow these instructions may result in damage to the vehicle.

Disconnect the high and low pressure hoses from the DPF differential pressure sensor.

- Release the 2 clips.

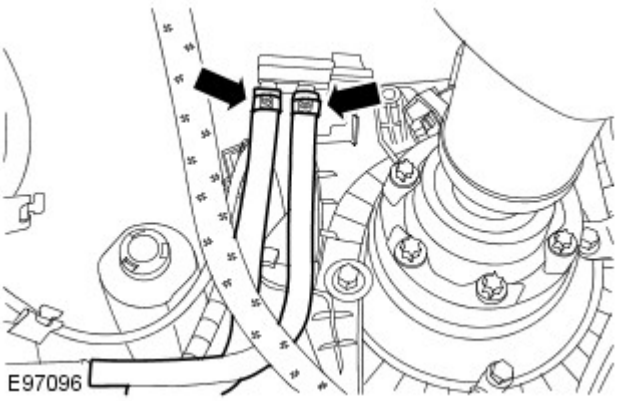

Installation

1. Connect the high and low pressure hoses to the DPF differential pressure sensor.

- Secure the clips.

mex30.com

2. Secure the DPF differential pressure sensor.
   - Secure with the clip.
3. Connect the DPF differential pressure sensor electrical connector.

mcx30.com

Published: 11-May-2011

Exhaust System - TDV6 2.7L Diesel - Exhaust SystemVehicles Without: Diesel Particulate Filter (DPF)

Removal and Installation

Removal

1. Disconnect the battery ground cable.
   For additional information, refer to: Specifications (414-00 Battery and Charging System - General Information, Specifications).

2. WARNING: Do not work on or under a vehicle supported only by a jack. Always support the vehicle on safety stands.

   Raise and support the vehicle.

3. Remove the engine undershield.
   For additional information, refer to: Engine Undershield (501-02 Front End Body Panels, Removal and Installation).

4. Remove the transmission crossmember.
   For additional information, refer to: Transmission Support Crossmember - V8 5.0L Petrol (502-02 Full Frame and Body Mounting, Removal and Installation).

5. Disconnect the catalytic converter from the exhaust manifold.
   - Remove the 3 nuts.
   - Discard the gasket.

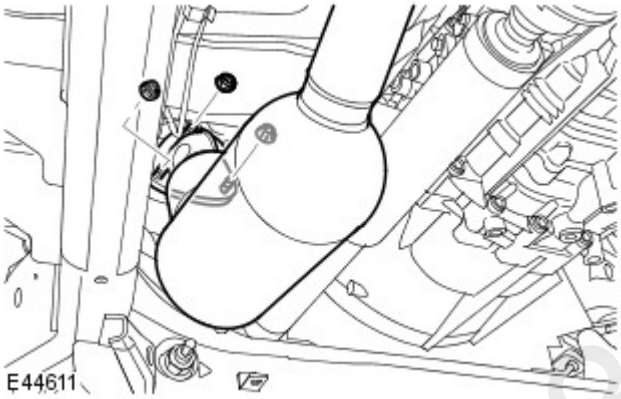

6. With assistance, remove the exhaust system.
   - Disconnect the 5 exhaust hangers.

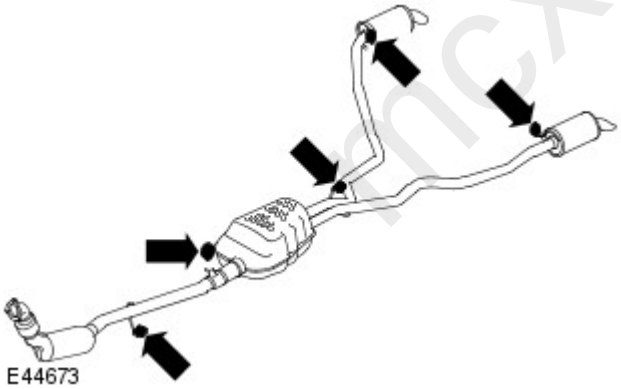

Installation

1. With assistance, install the exhaust system.
   - Attach the exhaust hangers.

2. Position the catalytic converter to the exhaust manifold.
   - Clean the components.
   - Install a new gasket.
   - Tighten the nuts to 48 Nm (35 lb.ft).

3. Install the transmission crossmember.
   For additional information, refer to: Transmission Support Crossmember - V8 5.0L Petrol (502-02 Full Frame and Body

mcx30.com

Mounting, Removal and Installation).

4. Install the engine undershield.
   For additional information, refer to: Engine Undershield (501-02 Front End Body Panels, Removal and Installation).
5. Connect the battery ground cable.
   For additional information, refer to: Specifications (414-00 Battery and Charging System - General Information, Specifications).

mcx30.com

Published: 11-May-2011

Exhaust System - TDV6 2.7L Diesel - Exhaust SystemVehicles With: Diesel Particulate Filter (DPF)

Removal and Installation

Removal

WARNING: Observe due care when working near a hot exhaust system.

1. WARNING: Do not work on or under a vehicle supported only by a jack. Always support the vehicle on safety stands.

Raise and support the vehicle.

2. Remove the transmission crossmember.
For additional information, refer to: Transmission Support Crossmember - V8 5.0L Petrol (502-02 Full Frame and Body Mounting, Removal and Installation).

3. Disconnect the diesel particulate filter (DPF), differential pressure sensor electrical connector.

4.

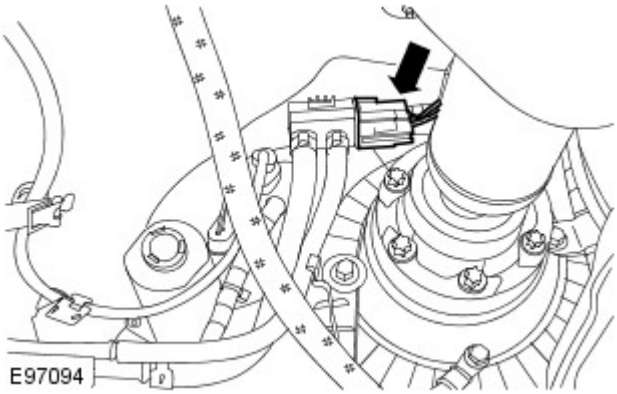

5. Release the DPF differential pressure sensor.

- Release the clip.

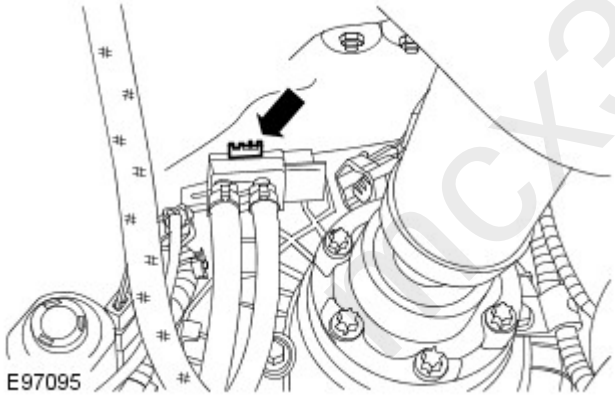

6. Disconnect the post-catalytic converter exhaust gas temperature sensor electrical connector.

- Release the 2 clips.

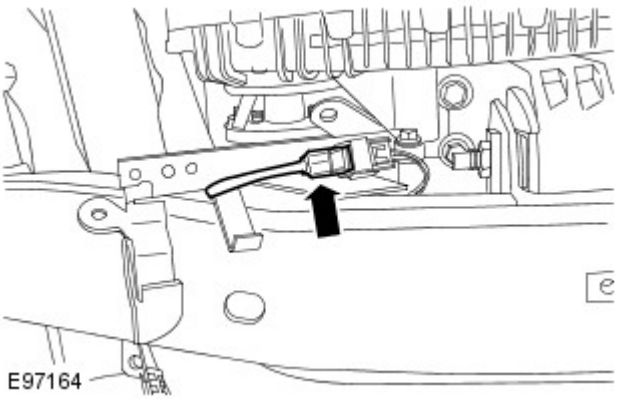

mcx30.com

7. Disconnect the DPF exhaust gas temperature sensor electrical connector.

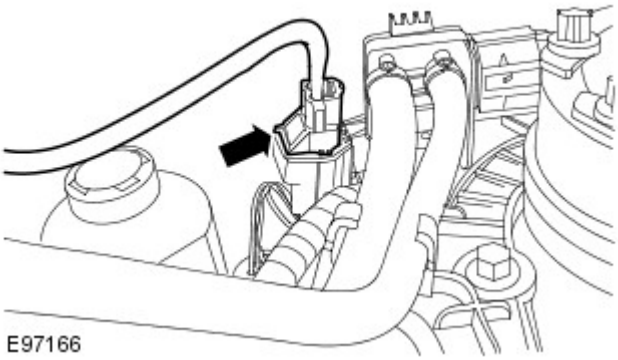

8. Loosen the catalytic converter to DPF clamp.

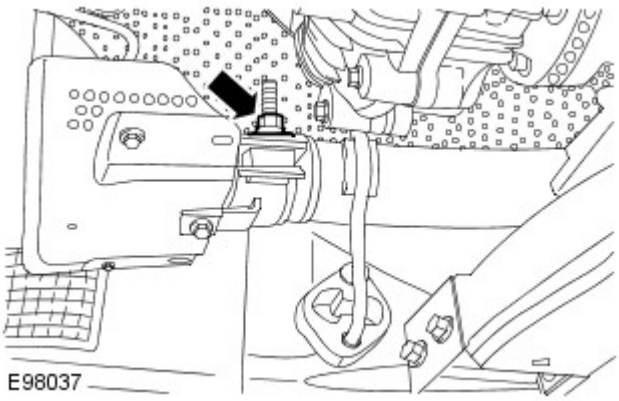

9. NOTE: Discard the gasket.

Release the catalytic converter from the turbocharger.

- Remove and discard the 3 nuts.

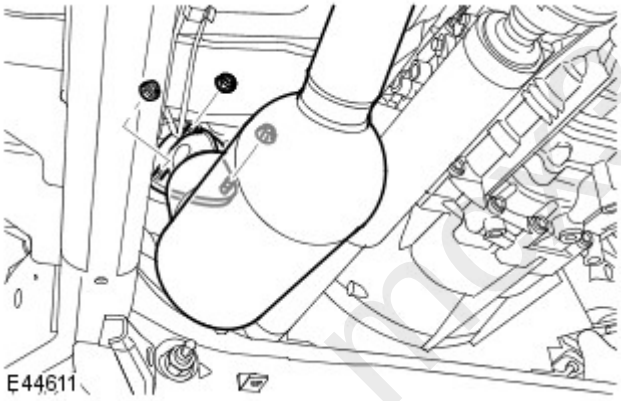

10. Remove the exhaust gas temperature sensor electrical connector heat shield.

- Remove the bolt.

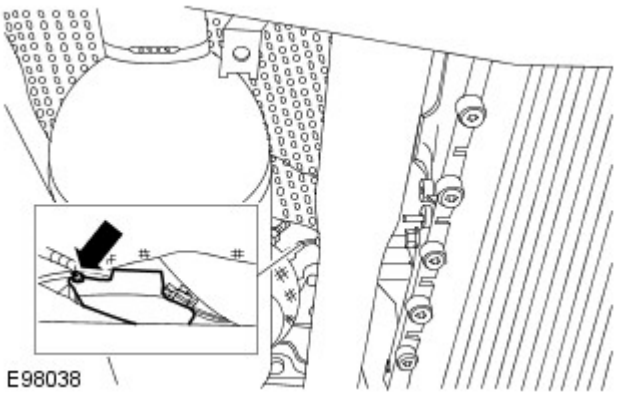

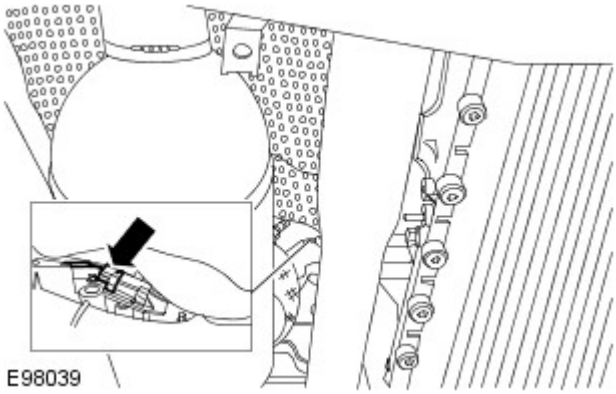

11. Disconnect the pre-catalytic converter exhaust gas temperature sensor electrical connector.

12. With assistance, remove the exhaust system.

- Release the 6 exhaust hangers.

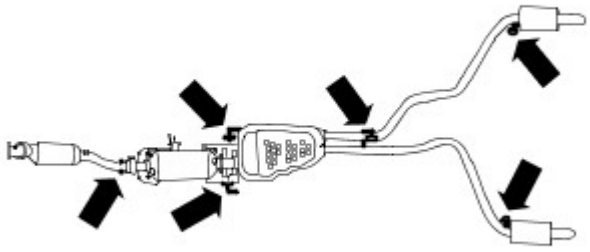

13. NOTE: Do not disassemble further if the component is removed for access only.

• NOTE: Make a note of the fitted positions of the sensors before removal.

Remove the 3 exhaust gas temperature sensors.

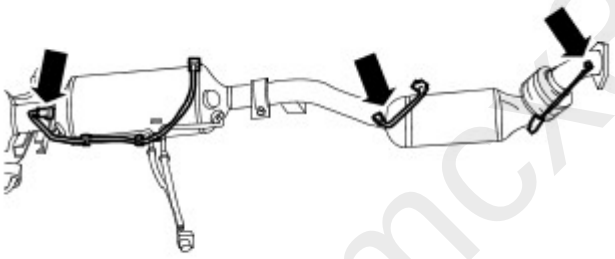

14. Remove the 6 exhaust hangers.

15. Remove the 2 DPF heat shields.

- Remove the bolts.

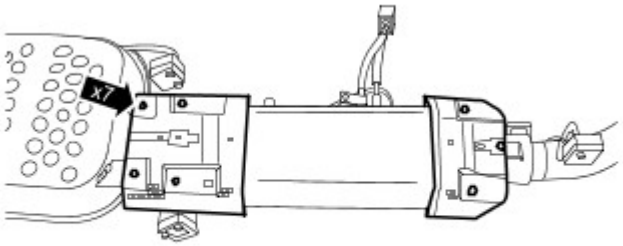

Installation

1. Install the 2 DPF heat shields.

mcx30.com

- Tighten to 10 Nm (7 lb.ft).

2. Install the exhaust hangers.

3. Install the exhaust gas temperature sensors.

- Tighten to 35 Nm (26 lb.ft).

4. With assistance, install the exhaust system.

- Secure the exhaust hangers.

5. Connect the pre-catalytic converter exhaust gas temperature sensor electrical connector.

6. Install the exhaust gas temperature sensor electrical connector heat shield.

- Tighten to 10 Nm (7 lb.ft).

7. CAUTION: Make sure that the mating faces are clean and free of corrosion and foreign material.

• NOTE: Install a new gasket.

Secure the catalytic converter to the turbocharger.

- Tighten the nuts to 48 Nm (35 lb.ft).

8. Secure the catalytic converter to DPF clamp.

- Tighten to 48 Nm (35 lb.ft).

9. Connect the DPF exhaust gas temperature sensor electrical connector.

10. Connect the post-catalytic converter exhaust gas temperature sensor electrical connector.

11. Secure the DPF differential pressure sensor.

12. Connect the DPF differential pressure sensor electrical connector.

13. Install the transmission crossmember.
For additional information, refer to: Transmission Support Crossmember - V8 5.0L Petrol (502-02 Full Frame and Body Mounting, Removal and Installation).

mcx30.com

Published: 11-May-2011

Exhaust System - TDV6 2.7L Diesel - MufflerVehicles Without: Diesel Particulate Filter (DPF)

Removal and Installation

Special Tool(s)	
	Pipe cutter-exhaust 100-051 (LRT-99-027)

Removal

1. WARNING: Do not work on or under a vehicle supported only by a jack. Always support the vehicle on safety stands.

Raise and support the vehicle.

2. Disconnect the catalytic converter from the muffler assembly.

- Remove the nut and release the retaining clamp.

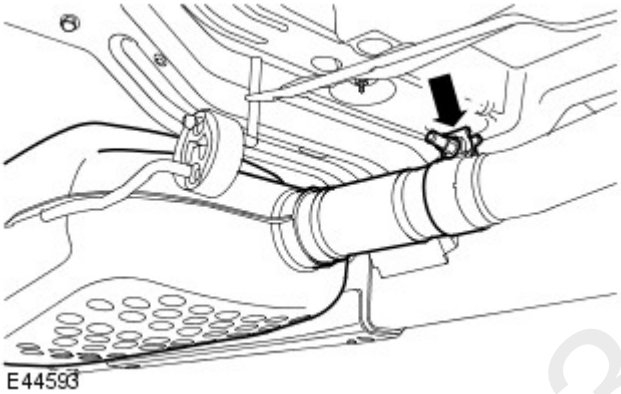

3. With assistance, remove the muffler assembly.

- Disconnect the 4 exhaust hangers.

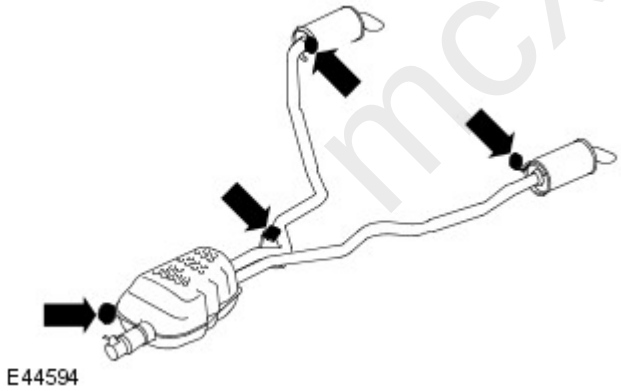

4. NOTE: Do not disassemble further if the component is removed for access only.

Remove the LH tail pipe.

- Using 100-051, cut the tail pipe at the point indicated by a depression in the pipe.

mcx30.com

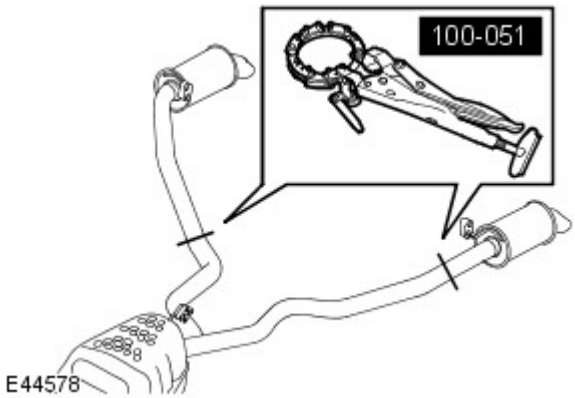

5. Remove the RH tail pipe.

- Using 100-051, cut the tail pipe at the point indicated by a depression in the pipe.

Installation

1. NOTE: Do not tighten the retaining clamp at this stage.

Position the RH tail pipe to the muffler assembly.

- Clean the components.
- Install the retaining clamp.

2. NOTE: Do not tighten the retaining clamp at this stage.

Position the LH tail pipe to the muffler assembly.

- Clean the components.
- Install the retaining clamp.

3. With assistance, install the muffler assembly.

- Attach the exhaust hangers.
- Tighten the catalytic converter nuts and clamp to 48 Nm (35 lb.ft).

4. Align both tail pipes and tighten the retaining clamps to 55 Nm (40 lb.ft).

mcx30.com

Published: 11-May-2011

Exhaust System - TDV6 2.7L Diesel - MufflerVehicles With: Diesel Particulate Filter (DPF)

Removal and Installation

Removal

WARNING: Observe due care when working near a hot exhaust system.

1. WARNING: Do not work on or under a vehicle supported only by a jack. Always support the vehicle on safety stands.

Raise and support the vehicle.

2. Disconnect the diesel particulate filter (DPF), differential pressure sensor electrical connector.

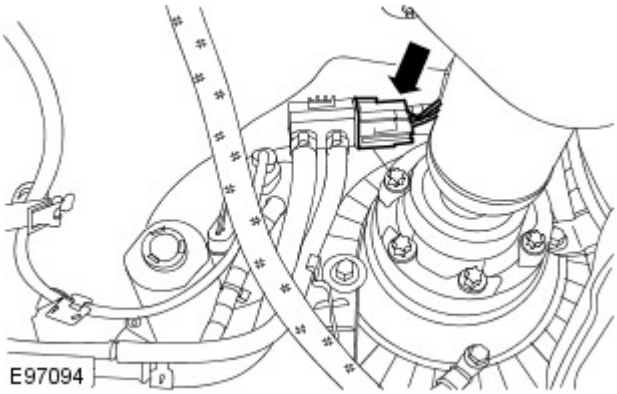

3. Release the DPF differential pressure sensor.

- Release the clip.

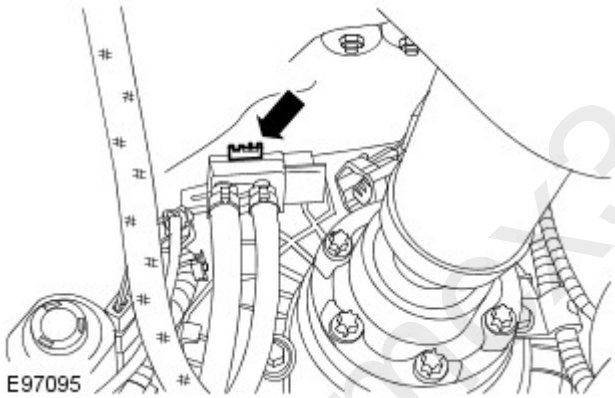

4. Disconnect the DPF exhaust gas temperature sensor electrical connector.

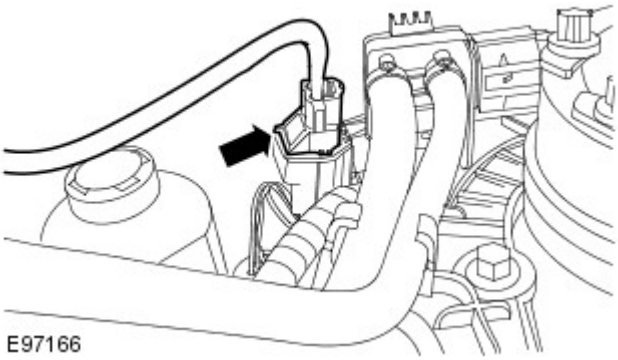

mex30.com

5. CAUTION: Make sure that the exhaust system is supported with a suitable transmission stand.

Release the 6 exhaust hangers.

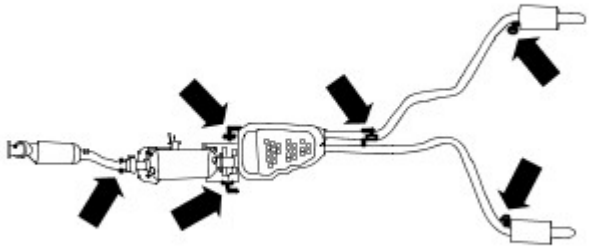

E98050

6. Remove the DPF rear heat shield.

- Remove the 4 bolts.

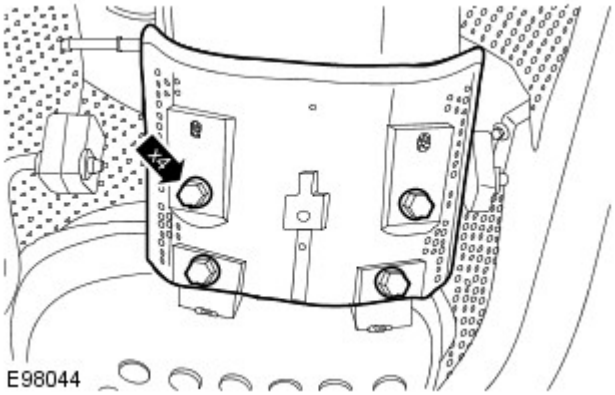

E98044

7. NOTE: Discard the gasket.

With assistance, remove the muffler and tailpipe assembly.

- Remove the 3 nuts.
- Remove the bracket.

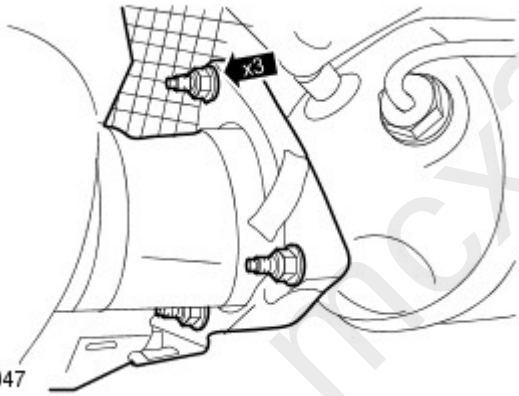

E98047

8. Remove the LH tail pipe.

- Using the special tool, cut the exhaust pipe at the marked position.

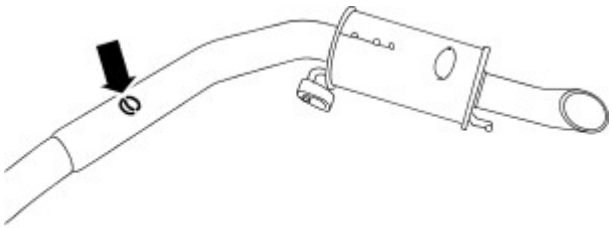

E87326

mcx30.com

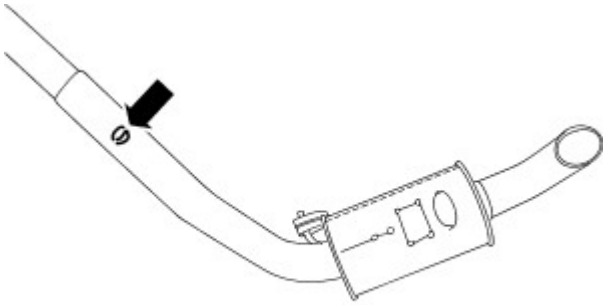

E87327

9. Remove the RH tail pipe.
   - Using the special tool, cut the exhaust pipe at the marked position.

Installation

1. NOTE: Do not tighten the clamp at this stage.

   Install the RH tail pipe to the muffler assembly.
   - Clean the components.
   - Install the clamp.
2. NOTE: Do not tighten the clamp at this stage.

   Install the LH tail pipe to the muffler assembly.
   - Clean the components.
   - Install the clamp.
3. NOTE: Install a new gasket.

   With assistance, install the muffler and tailpipe assembly.
   - Install the bracket.
   - Tighten the nuts to 48 Nm (35 lb.ft).
   - Secure the exhaust hangers.
4. Align both of the tail pipes and tighten the clamps to 48 Nm (35 lb.ft).
5. Install the DPF rear heat shield.
   - Tighten the bolts to 10 Nm (7 lb.ft).
6. Connect the DPF exhaust gas temperature sensor electrical connector.
7. Secure the DPF differential pressure sensor.
8. Connect the DPF differential pressure sensor electrical connector.

mcx30.com

Published: 11-May-2011

Exhaust System - TDV6 2.7L Diesel - Tailpipe

Removal and Installation

Special Tool(s)	
	Pipe cutter-exhaust 100-051 (LRT-99-027)

Removal

1. WARNING: Do not work on or under a vehicle supported only by a jack. Always support the vehicle on safety stands.

   Raise and support the vehicle.

2. Remove the tail pipe.
   - Using 100-051, cut the tail pipe at the point indicated by a depression in the pipe.
   - Disconnect from the exhaust hanger.

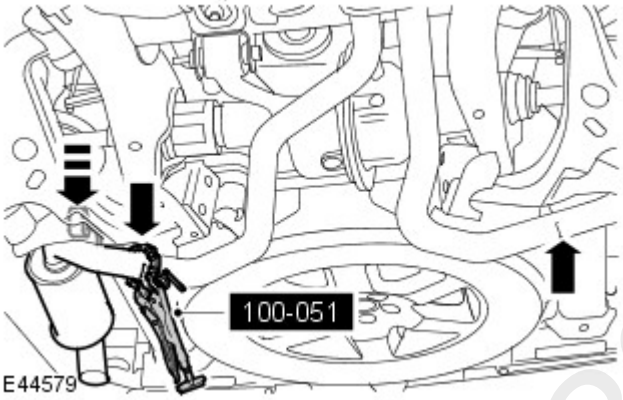

Installation

1. NOTE: Do not tighten the retaining clamp at this stage.

   Install the tail pipe.
   - Clean the components.
   - Install the retaining clamp.

2. Align the tail pipe and tighten the retaining clamp to 55 Nm (40 lb.ft).

mcx30.com